AD3RI... AUTOMATIC RECIPROCATING VALVES CETOP 3

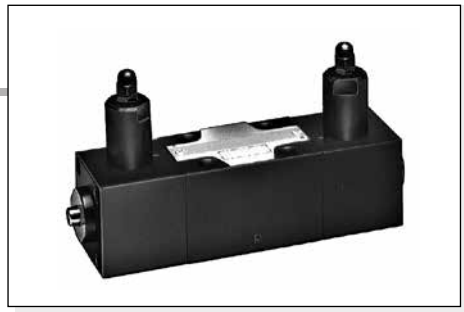

AD3RI...

This valve type is characterized by fully hydraulic operation, as it takes advantage of the system pressure rise to cause an automatic and continuous inversion of the utilization. The change-over takes place when the system pressure exceeds the inversion valves calibration pressure, and therefore also in not predetermined positions. At cylinder stroke end, the overall maximum pressure valve should be adjusted on a value 30% higher than the system operating pressure.

The inverter valves pressure calibration values should be 15% lower than that of the overall maximum pressure valve, and 15% higher than the maximum operating pressure.

Note: to operate the push button emergency, a minimum pressure of 3 bar on the actuator is needed.

Max. operating pressure		320 bar
Max. pressure port T		160 bar
Min. recommended pressure		15 bar
Max. flow		25 l/min
Min. flow		2 l/min
Setting ranges:	Spring 1	15 ÷ 50 bar
	Spring 2	20 ÷ 140 bar
	Spring 3	50 ÷ 320 bar
Fluid viscosity		10 ÷ 60 mm²/s
Fluid temperature		-20°C ÷ 75°C
Max. contamination level		class 10 in accordance with NAS 1638 with filter $ß_{25} \geq 75$
Weight		2,3 Kg

ORDERING CODE

AD	Directional valve
3	CETOP 3/NG6
RI	Automatic reciprocating valve hydraulically operated automatic reciprocation
211	Scheme
Z	No voltage
*	Setting ranges: **1** = 15 ÷ 50 bar **2** = 20 ÷ 140 bar **3** = 50 ÷ 320 bar
**	**00** = No variant **V1** = Viton
3	Serial No.

HYDRAULIC SYMBOL

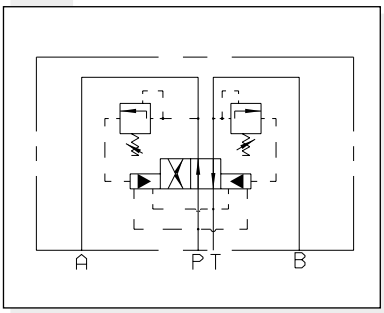

PRESSURE DROPS

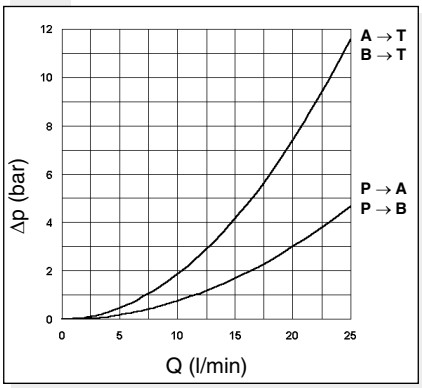

Tests carried out with mineral oil at a temperature of 40°C with viscosity of 46 mm²/s.

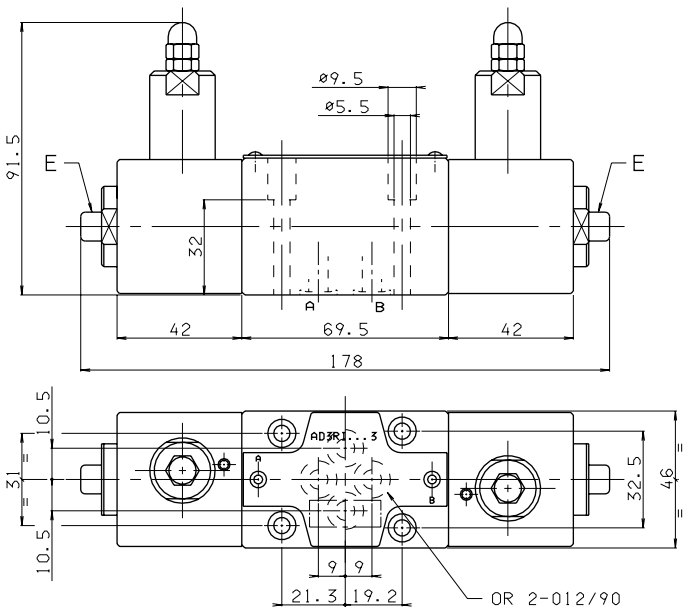

E = Manual override

Fixing screws UNI 5931 M5x40
with material specifications min. 8.8
Tightening torque 5 Nm / 0.5 Kgm

Support plane specifications

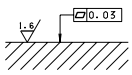

DANA BREVINI Motion Systems