COVERS ORDERING CODE

KEC	Covers for logic element 2/2
**	**16** = NG16 **25** = NG25
**	Type of cover (see Tab. 3) **RI** = Directional with external piloting **CQ** = Directional with stroke adjustment **RC** = Directional with interface NG6 **PC** = With hydraulic outlet pilot valve **SH** = With built-in-exchange (shuttle) **SP** = With built-in-exchange and interface NG6
**	**00** = No variant **V1** = Viton
2	Serial No.

TAB. 1 - COVERS HYDRAULIC SYMBOLS

Type	Symbol
KECRI**2** Directional with external piloting	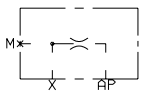
KECCQ**2** Directional with stroke adjustment	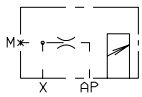
KECRC**2** Directional with interface NG6	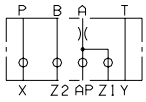
KECPC**2** With hydraulic outlet pilot valve	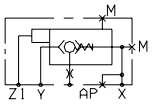
KECSH**2** With built-in-exchange valve (shuttle)	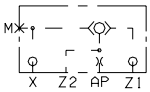
KECSP**2** With built-in-exchange valve (shuttle) and interface NG6	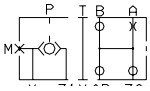

HYDRAULIC MOUNTING SCHEMES FOR KEC COVERS AND KEL LOGIC ELEMENTS

KEC16/25RI...
COVER WITH EXTERNAL PILOTING PORT

A = External piloting X allows flow in both directions A → B and B → A. B = For rapid sequence safety circuit; A → B flow is allowed; when pressure reaches X valve closes.
Only for CF variant (KEL.**:B... with drilled poppet), with no pressure in X it operates as a check valve between A and B.

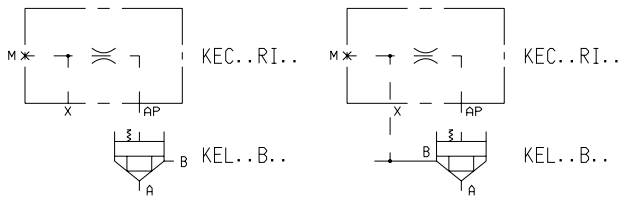

KEC16/25CQ...
COVER WITH STROKE LIMITATION

Allows flow regulation in both directions A → B and B → A.
By limiting the spool stroke the flow in both direction can be limited.

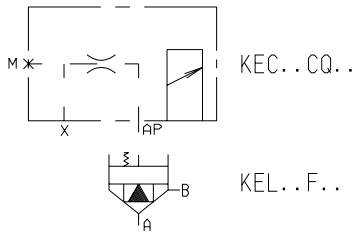

KEC16/25RC...
COVER WITH INTERFACE NG6

These covers have one mounting surface preset for a solenoid pilot valve.
Proper connection of Y and Z2 to the A and/or B ports will allowing piloting of the valve opening and closing functions.

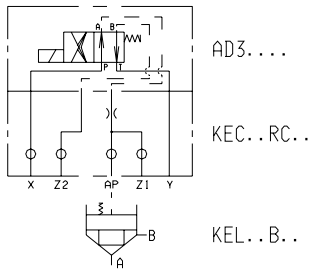

KEC16/25PC...
COVER WITH HYDRAULIC RELEASE PILOT VALVE

This is a cover with external piloting to be connected to B port to obtain the standard unit function. Z1 pressure piloting allows flow transfer from B → A. Normally, in order to ensure the holding condition the main port B is connected to the load; piloting in Z1 should be at least 50% of the load pressure in B.

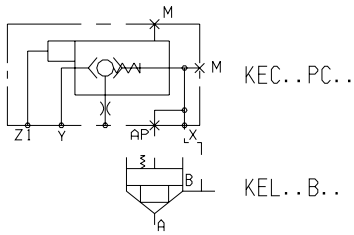

KEC16/25SH...
COVER WITH INTEGRAL CHANGEOVER VALVE

The logic element closes as function of the larger pressure in X and Z1, selected by the shuttle valve.

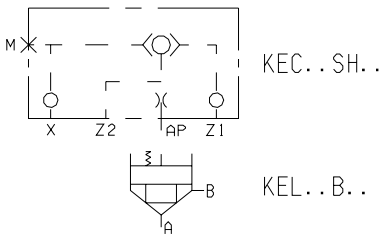

KEC16/25SP... COVER WITH INTEGRAL CHANGEOVER VALVE AND INTERFACE NG6

The AP branch of the cartridge valve spring is connected with the pilot valve port.
External piloting operates from Z2 → A of the pilot valve.
An example is shown in the diagram of a type of connection used to keep the conical seat valve closed on both sides (interrupted flow both from A → B and from B → A).

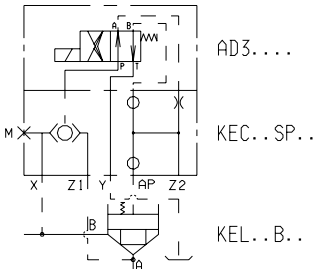

KRA16/25... COVER WITH ELECTRICAL CONTROL OF THE CLOSED POSITION AND INTERFACE NG6

See cartridge type KRA... next pages

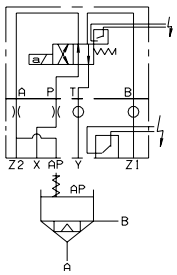

OVERALL DIMENSIONS KEC16RI... CHECK VALVE COVER

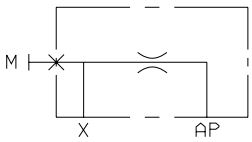

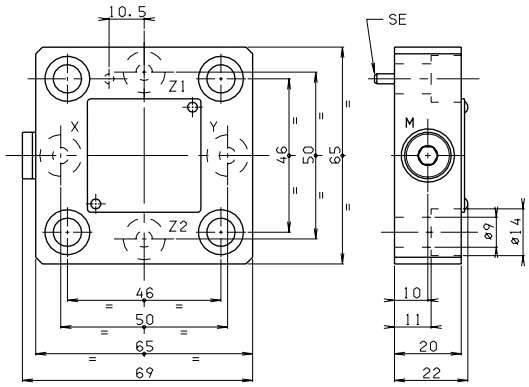

Weight: 0,5 Kg
M = pressure gauge attachment
Orifice with calibrated ø1 mm standard diameter
The covers are supplied with M8x25 UNI 5931
fixing screws, reference pin SE ø3x12 UNI 6873-71
Tightening torque 19÷24 Nm/1.9÷2.4 Kgm with 8.8 screws

OVERALL DIMENSIONS KEC25RI... CHECK VALVE COVER

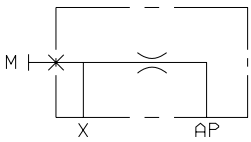

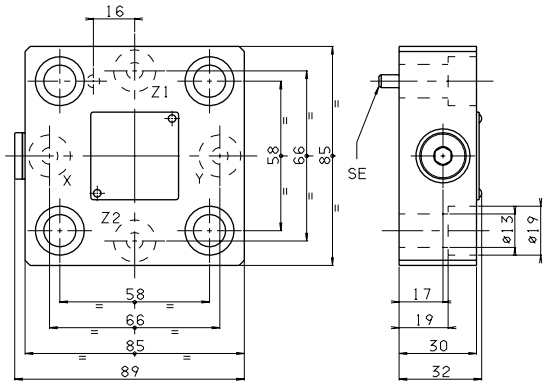

Weight: 1,3 Kg
M = pressure gauge attachment
Orifice with calibrated ø1 mm standard diameter
The covers are supplied with M12x35 UNI 5931
fixing screws, reference pin SE ø5X12 UNI 6873-71
Tightening torque 69÷80 Nm/6.9÷8 Kgm with 8.8 screws

OVERALL DIMENSIONS KEC16CQ.. COVER WITH STROKE ADJUSTMENT

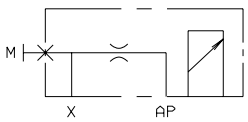

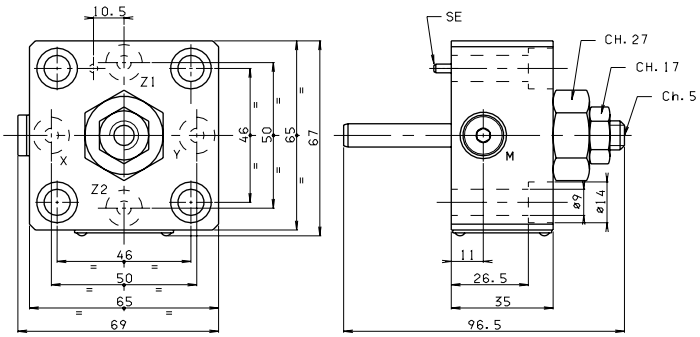

Weight: 0,9 Kg
M = pressure gauge attachment
Orifice with calibrated ø1 mm standard diameter
The covers are supplied with M8x40 UNI 5931
fixing screws, reference pin SE ø3x12 UNI 6873-71
Tightening torque 19÷24 Nm/1.9÷2.4 Kgm with 8.8 screws

OVERALL DIMENSIONS KEC25CQ.. COVER WITH STROKE ADJUSTMENT

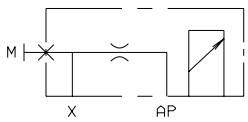

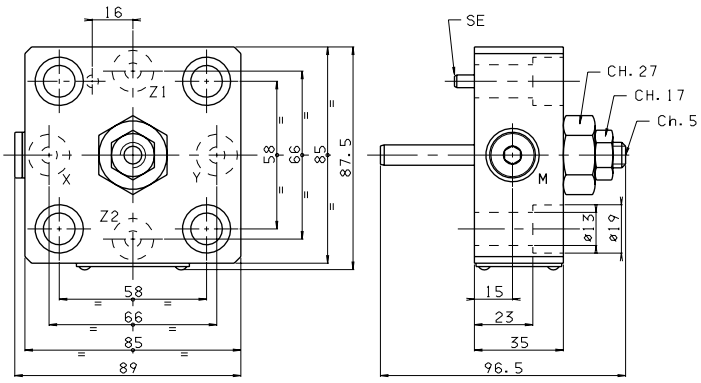

Weight: 1,6 Kg
M = pressure gauge attachment
Orifice with calibrated ø1 mm standard diameter
The covers are supplied with M12x40 UNI 5931
fixing screws, reference pin SE ø5X12 UNI 6873-71
Tightening torque 69÷80 Nm/6.9÷8 Kgm with 8.8 screws

OVERALL DIMENSIONS KEC16RC... COVER WITH INTERFACE CETOP 3/NG6

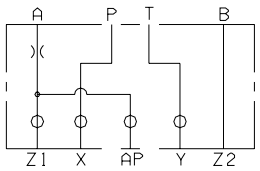

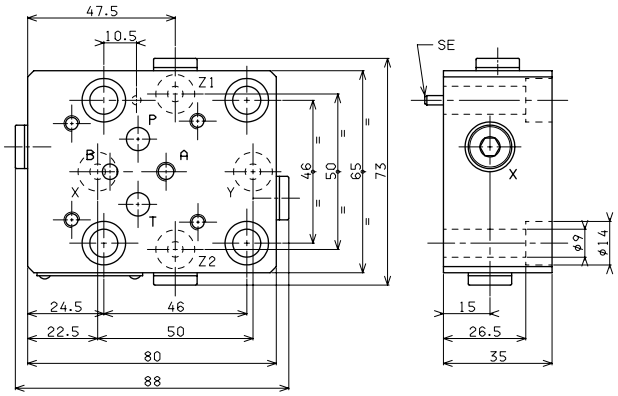

Weight: 1,2 Kg
M = pressure gauge attachment
Orifice with calibrated ø1 mm standard diameter
The covers are supplied with M8x40 UNI 5931
fixing screws, reference pin SE ø3x12 UNI 6873-71
tightening torque 19÷24 Nm/1.9÷2.4 Kgm with 8.8 screws

OVERALL DIMENSIONS KEC25RC... COVER WITH INTERFACE CETOP 3/NG6

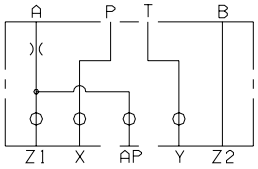

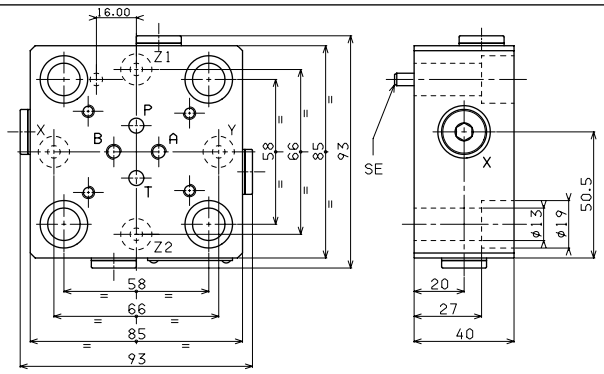

Weight: 1,8 Kg
M = pressure gauge attachment
Orifice with calibrated ø1 mm standard diameter
The covers are supplied with M12x45 UNI 5931
fixing screws, reference pin SE ø5X12 UNI 6873-71
tightening torque 69÷80 Nm/6.9÷8 Kgm with 8.8 screws

OVERALL DIMENSIONS KEC16PC... COVER WITH HYDRAULIC OUTLET PILOT VALVE

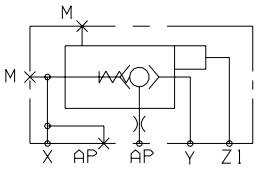

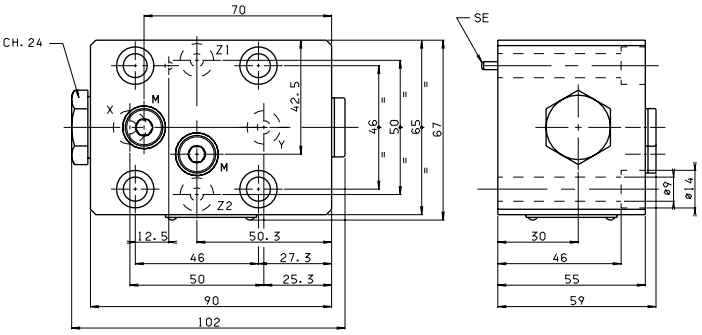

Weight: 2,1 Kg
M = pressure gauge attachment
Orifice with calibrated ø1 mm standard diameter
The covers are supplied with M8x60 UNI 5931
fixing screws, reference pin SE ø3x12 UNI 6873-71
tightening torque 19÷24 Nm/1.9÷2.4 Kgm with 8.8 screws

OVERALL DIMENSIONS KEC25PC... COVER WITH HYDRAULIC OUTLET PILOT VALVE

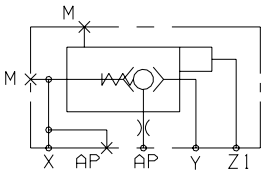

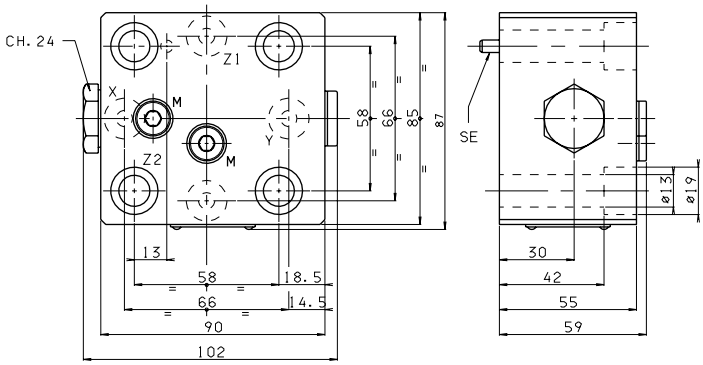

Weight: 2,7 Kg
M = pressure gauge attachment
Orifice with calibrated ø1 mm standard diameter
The covers are supplied with M12x60 UNI 5931
fixing screws, reference pin SE ø5X12 UNI 6873-71
tightening torque 69÷80 Nm/6.9÷8 Kgm with 8.8 screws

OVERALL DIMENSIONS KEC16SH... COVER WITH BUILT-IN EXCHANGE VALVE

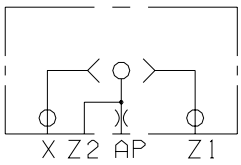

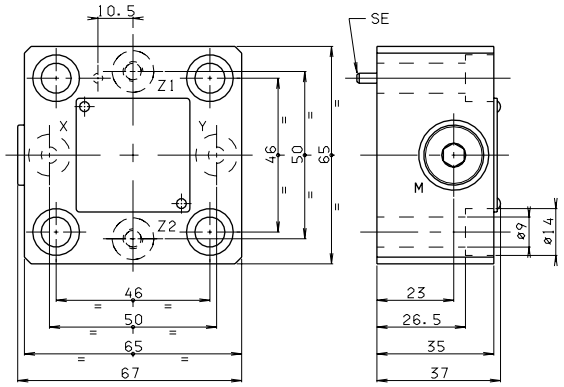

Weight: 0,9 Kg
M = pressure gauge attachment
Orifice with calibrated ø1 mm standard diameter
The covers are supplied with M8x40 UNI 5931
fixing screws, reference pin SE ø3x12 UNI 6873-71
tightening torque 19÷24 Nm/1.9÷2.4 Kgm with 8.8 screws

OVERALL DIMENSIONS KEC25SH... COVER WITH BUILT-IN EXCHANGE VALVE

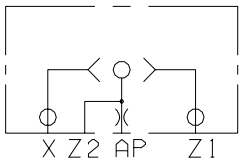

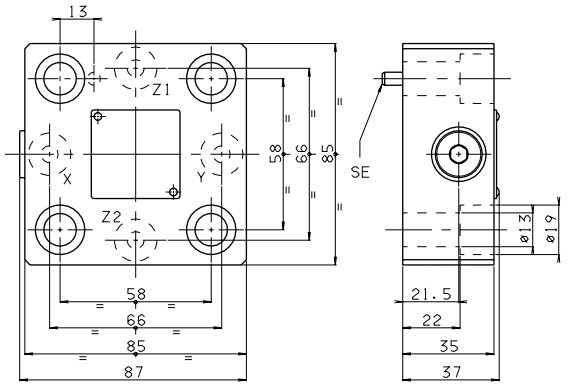

Weight: 1,5 Kg
M = pressure gauge attachment
Orifice with calibrated ø1 mm standard diameter
The covers are supplied with M12x40 UNI 5931
fixing screws, reference pin SE ø5X12 UNI 6873-71
tightening torque 69÷80 Nm/6.9÷8 Kgm with 8.8 screws

OVERALL DIMENSIONS KEC16SP COVER WITH BUILT-IN EXCHANGE VALVE AND INTERFACE CETOP 3/NG6

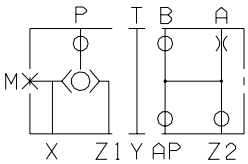

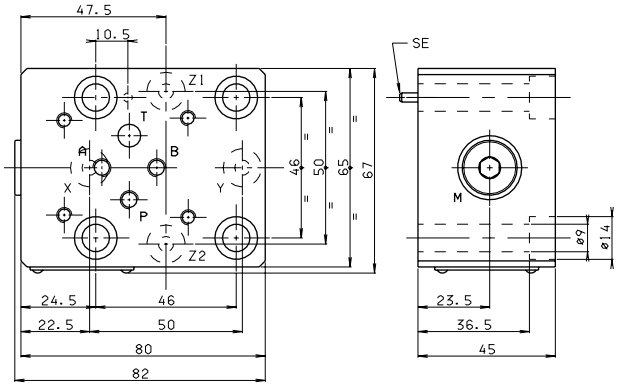

Weight: 1,4 Kg
M = pressure gauge attachment
Orifice with calibrated ø1 mm standard diameter
The covers are supplied with M8x50 UNI 5931
fixing screws, reference pin SE ø3x12 UNI 6873-71
tightening torque 19÷24 Nm/1.9÷2.4 Kgm with 8.8 screws

OVERALL DIMENSIONS KEC25SP COVER WITH BUILT-IN EXCHANGE VALVE AND INTERFACE CETOP 3/NG6

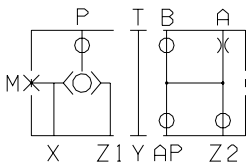

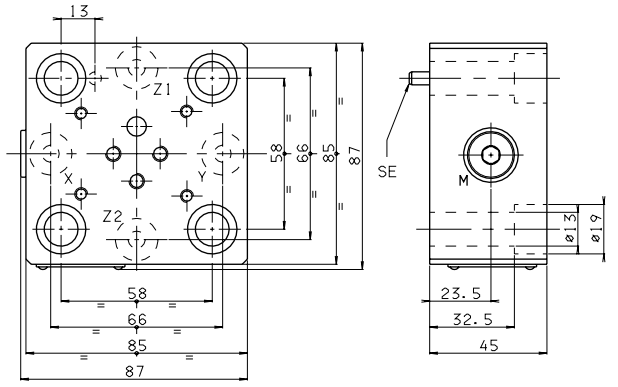

Weight: 2 Kg
M = pressure gauge attachment
Orifice with calibrated ø1 mm standard diameter
The covers are supplied with M12x50 UNI 5931
fixing screws, reference pin SE ø5X12 UNI 6873-71
tightening torque 69÷80 Nm/6.9÷8 Kgm with 8.8 screws